BLACKMAGIC FAIRLIGHT AUDIO INTERFACE

Fairlight Audio Interface is a professional audio post production I/O interface with an extensive variety of analog and digital inputs and outputs, preamps for microphones and instruments, built in sample rate conversion, sync at any standard frame rate and dual 9-pin control ports! Fairlight Audio Interface requires Fairlight Audio Accelerator and connects to the Fairlight Audio Interface with a supplied proprietary interface cable.

Cena:

Kategorie: Video, Broadcast, Encodowanie i Streaming



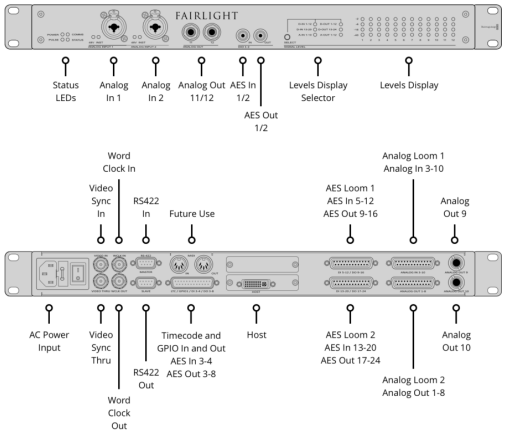

GALLERY IMAGES



OPIS

Connections

Analog Audio Inputs

2 x remote controlled XLR/TRS microphone inputs with 48v phantom power / instrument preamps.

8 x +24dBu balanced analog inputs.

Analog Audio Outputs

12 x +24dBu balanced analog outputs with mute protection.

Digital Audio Inputs

9 x fully transformer coupled AES stereo digital inputs.

1 x S/PDIF input with sample-rate conversion.

Digital Audio Outputs

11 x AES stereo digital outputs.

1 x stereo digital S/PDIF output.

Standard 25pin Tascam interface for Analog and AES looms.

Sync Input

1 x 75 ohm BNC Reference input. Tri-Sync or Black Burst.

1 x 75 ohm BNC word clock input.

Sync Output

1 x 75 ohm BNC Reference loop out. Tri-Sync or Black Burst.

1 x 75 ohm BNC word clock regenerated output.

Sync to all common frame rates and formats including HD Tri-level sync, video sync, word-clock and AES/EBU.

Device Control

1 x RS-422 9-pin machine control input.

1 x RS-422 9-pin machine control output.

Timecode

Timecode input and output with regeneration.

MIDI

For future use

GPIO

GPI and GPO connections for cough and ‘On-Air’ control

Product Specifics

Sample Rate:

44.1, 48, 96, 192 kHz

Max Input:

Inputs 1-2 (mic): +2.5dBu

Inputs 1-2 (instrument): +24dBu

Inputs 3-10 (Line): +24dBu

Gain Range:

Inputs 1-2: Mic Inputs: 50dB gain range (+21.5 to +71.5dB)

Inputs 1-2 : Instrument Setting: 50dB gain range (+0 to +50dB)

Mic E.I.N (unweighted):

Inputs 1-2: -127dBu @40dB (61.5dB)

Gain: 150 ohm source, 20Hz - 20kHz THD+N (mic input)

Inputs 1-2: <0.001%@ 1kHz, -1 dBFS at 0dB gain

Inputs 1-2: <0.004%@ 1kHz, -1 dBFS at 40dB (61.5dB) gain

THD+N (line input):

Inputs 1-2: <0.001%@ 1kHz, -1 dBFS after 0dB gain (unweighted)

Inputs 3-10 : <0.001 % @ 1 kHz (unweighted)

Dynamic Range (line input)

Inputs 1-2 : 108dB @ 0dB gain (unweighted)

Inputs 3-10: 110dB (unweighted)

Input Frequency Response

+0.05/-0.05dB, 20Hz - 20kHz

Input Impedance:

Inputs 1-2 (XLR) : 2k ohm

Inputs 1-2 (1/4"): >1M ohm

Inputs 3-10: 15k ohm

Max Output:

Outputs 1-12: +24 dBu

THD+N (Line Outputs):

Outputs 1-12: <0.002%

Dynamic Range (Line Output):

Outputs 1-12 : 109 dB (unweighted)

Output Frequency Response:

+0.05/-0.5dB, 20Hz - 20kHz

Output Impedance:

Outputs 1-12 : 50 ohms

Operating Systems

Mac 10.15 Catalina or later.
Windows 10, 64-bit.

Power Requirements

Power Supply

Internal 100 - 240V AC 50/60Hz with IEC C14 mains input.

Power Usage

40W

Power Management

Automatically powered-on/off only when the Fairlight Audio Accelerator is powered on.

Physical Specifications

Environmental Specifications

Operating Temperature

0° to 40°C (32° to 104°F)

Storage Temperature

-20° to 60°C (-4° to 140°F)

Relative Humidity

0% to 90% non-condensing

What's Included

Fairlight Audio Interface

Fairlight Audio Interface multi-pin cable to connect to Fairlight Audio Accelerator.

Warranty

1 Year Limited Manufacturer's Warranty.